Work Order ID 69069

Wednesday, April 27, 2011 2:40:46 PM

Item ID: D2989-041 **Accept** **Setup Start** **Stop**

Revision ID:

Item Name: Basket Lid Assembly

Start Date: 4/28/2011 **Start Qty:** 1.00 **Cust Item ID:**

Required Date: 5/13/2011 **Req'd Qty:** 1.00 **Customer:**

Reference:

Run Start **Stop**

Approvals: **Process Plan:** MF **Date:** 11-04-27 **Tooling:** **Date:**

QC: **Date:** **SPC (Y/N):** **Date:**

Sequence ID/ Work Center ID	Operation Description	Set Up/ Run Hours	Tool ID	Tool #	Plan Code	Accept Qty	Reject Qty	Reject Number	Insp. Stamp
Draw Nbr	**Revision Nbr**								
D2989	Rev D								
100	Large Fab	0.00							
Large Fab									
Large Fab	**Memo**	0.00							
Large Fab	1- assemble all ribs and both D2581 in DT9445 jig, weld as per dwg D2989 2- tack weld mesh on basket as per dwg D2989 using DT9445 jig ****cut cutouts with zip cut as per dwg D3832**** 3- remove from jig and weld lable plate as per dwg D2989 A/R ER316 S.S. Rod Batch: 115928 *** PLEASE NOTE**** IF MAKING -043A : ENSURE 1 X D3836-041 HAS NO BUSHING AND HAS HOLES PER DSI9473								
110	QC9- Inspect visual per QSI004- Fusion Welds	0.00							
QC	**Memo**	0.00							
Quality Control									

11-05-04

BE 11.05.04

1 ϕ

Dart Aerospace Ltd

W/O:		WORK ORDER CHANGES					
DATE	STEP	PROCEDURE CHANGE	By	Date	Qty	Approval Chief Eng / Prod Mgr	Approval QC Inspector

Part No: _____ **PAR #:** _____ **Fault Category:** _____ **NCR:** Yes No **DQA:** _____ **Date:** _____

Resolution: _____ **Disposition:** _____ **QA: N/C Closed:** _____ **Date:** _____

NCR:		WORK ORDER NON-CONFORMANCE (NCR)						
DATE	STEP	Description of NC Section A	Corrective Action Section B			Verification Section C	Approval Chief Eng	Approval QC Inspector
			Initial Chief Eng	Action Description Chief Eng	Sign & Date			

NOTE: Date & initial all entries

Work Order ID 69069

Wednesday, April 27, 2011 2:40:46 PM

Item ID: D2989-041 **Accept** **Setup Start** **Stop**

Revision ID:

Item Name: Basket Lid Assembly

Start Date: 4/28/2011 **Start Qty:** 1.00 **Cust Item ID:**

Required Date: 5/13/2011 **Req'd Qty:** 1.00 **Customer:**

Reference:

Run Start **Stop**

Approvals: **Process Plan:** _____ **Date:** _____ **Tooling:** _____ **Date:** _____

QC: _____ **Date:** _____ **SPC (Y/N):** _____ **Date:** _____

Sequence ID/ Work Center ID	Operation Description	Set Up/ Run Hours	Tool ID	Tool #	Plan Code	Accept Qty	Reject Qty	Reject Number	Insp. Stamp
120	QC6- Inspect dimensions to drawing	0.00							
QC	Memo	0.00							
Quality Control									
125	Pressure Wash per QSI005 4.3	0.00							
HandFinish	Memo	0.00							
Hand Finishing									

Dart Aerospace Ltd

W/O:		WORK ORDER CHANGES					
DATE	STEP	PROCEDURE CHANGE	By	Date	Qty	Approval Chief Eng / Prod Mgr	Approval QC Inspector

Part No: _____ **PAR #:** _____ **Fault Category:** _____ **NCR:** Yes No **DQA:** _____ **Date:** _____

Resolution: _____ **Disposition:** _____ **QA: N/C Closed:** _____ **Date:** _____

NCR:		WORK ORDER NON-CONFORMANCE (NCR)						
DATE	STEP	Description of NC Section A	Corrective Action Section B			Verification Section C	Approval Chief Eng	Approval QC Inspector
			Initial Chief Eng	Action Description Chief Eng	Sign & Date			

NOTE: Date & initial all entries

Work Order ID 69069

Wednesday, April 27, 2011 2:40:46 PM

Item ID: D2989-041 **Accept** **Setup Start** **Stop**

Revision ID:

Item Name: Basket Lid Assembly

Start Date: 4/28/2011 **Start Qty:** 1.00 **Cust Item ID:**

Required Date: 5/13/2011 **Req'd Qty:** 1.00 **Customer:**

Reference:

Run Start **Stop**

Approvals: **Process Plan:** _____ **Date:** _____ **Tooling:** _____ **Date:** _____

QC: _____ **Date:** _____ **SPC (Y/N):** _____ **Date:** _____

Sequence ID/ Work Center ID	Operation Description	Set Up/ Run Hours	Tool ID	Tool #	Plan Code	Accept Qty	Reject Qty	Reject Number	Insp. Stamp
130	White Gloss(Ref:4.3.5.2) per QSI005 4.3-Steel	0.00				1X			
Powdercoat	**Memo**	0.00							
Powder Coating	1- Plug holes prior to powder coating 2-Powder Coat White (Ref. 4.3.5.2) D2989-041 as per QSI 005 4.3 & Dwg D2989 1ST COAT: START TIME: 3:30 or OVEN TEMPERATURE: 400 FINISH TIME: 4:00 ********** 2nd coat if necessary ********** 2ND COAT: START TIME: _____ OVEN TEMPERATURE: _____ FINISH TIME: _____								
131	Wing Walk as per dwg QSI005 4.4 Batch M117815	0.00				X1			
HandFinish	**Memo**	0.00							
Hand Finishing	Mask lid prior to spray paint black and wing walk as per dwg A/R Spray paint black batch: M116123								

M 116964

M-L 11/05/04

11/05/05

Dart Aerospace Ltd

W/O:		WORK ORDER CHANGES					
DATE	STEP	PROCEDURE CHANGE	By	Date	Qty	Approval Chief Eng / Prod Mgr	Approval QC Inspector

Part No: _____ **PAR #:** _____ **Fault Category:** _____ **NCR:** Yes No **DQA:** _____ **Date:** _____

Resolution: _____ **Disposition:** _____ **QA: N/C Closed:** _____ **Date:** _____

NCR:		WORK ORDER NON-CONFORMANCE (NCR)						
DATE	STEP	Description of NC Section A	Corrective Action Section B			Verification Section C	Approval Chief Eng	Approval QC Inspector
			Initial Chief Eng	Action Description Chief Eng	Sign & Date			

NOTE: Date & initial all entries

H:\fFORMS\Quality Assurance\approved QA\NCRWO RevE

Work Order ID 69069

Wednesday, April 27, 2011 2:40:46 PM

Item ID: D2989-041 **Accept** **Setup Start**

Revision ID:

Item Name: Basket Lid Assembly **Stop**

Start Date: 4/28/2011 **Start Qty:** 1.00 **Cust Item ID:**

Required Date: 5/13/2011 **Req'd Qty:** 1.00 **Customer:**

Reference:

Approvals: **Process Plan:** _____ **Date:** _____ **Tooling:** _____ **Date:** _____ **Run Start**

QC: _____ **Date:** _____ **SPC (Y/N):** _____ **Date:** _____ **Stop**

Sequence ID/ Work Center ID	Operation Description	Set Up/ Run Hours	Tool ID	Tool #	Plan Code	Accept Qty	Reject Qty	Reject Number	Insp. Stamp
140	QC3- Inspect Part Finish	0.00							
QC	Memo	0.00							
Quality Control									
141	Identify as per dwg & Stock Location: GA	0.00							
Packaging	Memo w/o 69067	0.00							
Packaging									
150	QC21- Final Inspection - Work Order Release	0.00							
QC	Memo	0.00							
Quality Control									

11/05/05

11/05/05

11/5/05

MF
11-05-05

Dart Aerospace Ltd

W/O:		WORK ORDER CHANGES					
DATE	STEP	PROCEDURE CHANGE	By	Date	Qty	Approval Chief Eng / Prod Mgr	Approval QC Inspector

Part No: _____ **PAR #:** _____ **Fault Category:** _____ **NCR:** Yes No **DQA:** _____ **Date:** _____

Resolution: _____ **Disposition:** _____ **QA: N/C Closed:** _____ **Date:** _____

NCR:		WORK ORDER NON-CONFORMANCE (NCR)						
DATE	STEP	Description of NC Section A	Corrective Action Section B			Verification Section C	Approval Chief Eng	Approval QC Inspector
			Initial Chief Eng	Action Description Chief Eng	Sign & Date			

NOTE: Date & initial all entries

Picklist Print

Wednesday, April 27, 2011 2:40:42 PM

3

Work Order ID: 69069

Parent Item: D2989-041

Parent Item Name: Basket Lid Assembly

Start Date: 4/28/2011 **Required Date:** 5/13/2011

Start Qty: 1.00 **Required Qty:** 1.00

Comments:
IPP Rev:I Removed D2989-043 05-11-03 JLM
IPP Rev:J 08-08-29 revC as per dwg DD verified by:EC
IPP Rev:K 08-09-24 plug hole prior to powder coating DD verified by:EC
IPP Rev:L 08-12-02 revD as per dwg DD verified by:EC IPP rev:M
10.09.14 added pressure wash DD verf:EC

Component Item ID/ Item Name	Replacement Item ID	Mfg/ Purch	Bin Item	Primary Location	Last Location	Route Seq ID	Unit of Measure	Qty on Hand	Qty per Kit	Total Qty	Qty Issued	Date Issued	Status
D2221-1 Rib		Manufactured	No			100	Each	22.0000	2	2			
				Location		**Loc Qty**		**Loc Code**					
				WA006		22							
					67350	10				2			
					67465	12							
D2506 Label Plate		Manufactured	No			100	Each	3.0000	1	1			
				Location		**Loc Qty**		**Loc Code**					
				WA006		3							
					65539	3				1			
D2512-7 Rib		Manufactured	No			100	Each	10.0000	1	1			
				Location		**Loc Qty**		**Loc Code**					
				WA006		10							
					65540	6				1			
					67445	4							

Dart Aerospace Ltd

W/O:		WORK ORDER CHANGES					
DATE	STEP	PROCEDURE CHANGE	By	Date	Qty	Approval Chief Eng / Prod Mgr	Approval QC Inspector

Part No: _____ **PAR #:** _____ **Fault Category:** _____ **NCR:** Yes No **DQA:** _____ **Date:** _____

Resolution: _____ **Disposition:** _____ **QA: N/C Closed:** _____ **Date:** _____

NCR:		WORK ORDER NON-CONFORMANCE (NCR)						
DATE	STEP	Description of NC Section A	Corrective Action Section B			Verification Section C	Approval Chief Eng	Approval QC Inspector
			Initial Chief Eng	Action Description Chief Eng	Sign & Date			

NOTE: Date & initial all entries

Picklist Print

Wednesday, April 27, 2011 2:40:43 PM

Work Order ID: 69069

Parent Item: D2989-041

Parent Item Name: Basket Lid Assembly

Start Date: 4/28/2011 **Required Date:** 5/13/2011

Start Qty: 1.00 **Required Qty:** 1.00

D2581 Mounting Bracket	Manufactured	No	100	Each	16.0000	2	2	Pl 11.05.04	
	Location		**Loc Qty**	**Loc Code**					
	WA005		16						
		66806	16					2	
D2989-13 Rib	Manufactured	No	100	Each	4.0000	2	2	Pl 11.05.04	
	Location		**Loc Qty**	**Loc Code**					
	WA005		4						
		67984	4					2	
D2989-19 Rib	Manufactured	No	100	Each	4.0000	2	2	Pl 11.05.04	
	Location		**Loc Qty**	**Loc Code**					
	WA008		4						
		67446	4					2	
D3832-3 Mesh (Lid)	Manufactured	No	100	Each	6.0000	1	1	Pl 11.05.04	
	Location		**Loc Qty**	**Loc Code**					
	WA		6						
		67066	3					1	
		67501	3						

Dart Aerospace Ltd

W/O:		WORK ORDER CHANGES					
DATE	STEP	PROCEDURE CHANGE	By	Date	Qty	Approval Chief Eng / Prod Mgr	Approval QC Inspector

Part No: _____ **PAR #:** _____ **Fault Category:** _____ **NCR:** Yes No **DQA:** _____ **Date:** _____

Resolution: _____ **Disposition:** _____ **QA: N/C Closed:** _____ **Date:** _____

NCR:		WORK ORDER NON-CONFORMANCE (NCR)						
DATE	STEP	Description of NC Section A	Corrective Action Section B			Verification Section C	Approval Chief Eng	Approval QC Inspector
			Initial Chief Eng	Action Description Chief Eng	Sign & Date			

NOTE: Date & initial all entries

H:\FORMS\Quality Assurance\approved QA\NCRWO RevE

Picklist Print

Wednesday, April 27, 2011 2:40:43 PM

Work Order ID: 69069

Parent Item: D2989-041

Parent Item Name: Basket Lid Assembly

Start Date: 4/28/2011 **Required Date:** 5/13/2011

Start Qty: 1.00 **Required Qty:** 1.00

D3833-3 Mesh (Lid End)	Manufactured	No	100	Each	35.0000	2	2	Pl 11.05.04

Location	Loc Qty	Loc Code
WA	35	
64375	2	
64947	6	
67460	27	

(2)

D3836-041 Rib Assembly (Basket Lid, LH)	Manufactured	No	100	Each	0.0000	1	1	366977 → (1) Pl 11.05.04
D3836-042 Rib Assembly (Basket Lid, RH)	Manufactured	No	100	Each	2.0000	1	1	Pl 11.05.04

Location	Loc Qty	Loc Code
WA005	2	
66978	2	

(1)

D3852-041 Rib Assembly	Manufactured	No	100	Each	2.0000	1	1	Pl 11.05.04

Location	Loc Qty	Loc Code
WA005	2	
66088	2	

(1)

D3852-042 Rib Assembly	Manufactured	No	100	Each	0.0000	1	1	366089 → (1) Pl 11.05.04

Dart Aerospace Ltd

W/O:		WORK ORDER CHANGES					
DATE	STEP	PROCEDURE CHANGE	By	Date	Qty	Approval Chief Eng / Prod Mgr	Approval QC Inspector

Part No: _____ **PAR #:** _____ **Fault Category:** _____ **NCR:** Yes No **DQA:** _____ **Date:** _____

Resolution: _____ **Disposition:** _____ **QA: N/C Closed:** _____ **Date:** _____

NCR:		WORK ORDER NON-CONFORMANCE (NCR)						
DATE	STEP	Description of NC Section A	Corrective Action Section B			Verification Section C	Approval Chief Eng	Approval QC Inspector
			Initial Chief Eng	Action Description Chief Eng	Sign & Date			

NOTE: Date & initial all entries

H:\FORMS\Quality Assurance\approved QA\NCRWO RevE

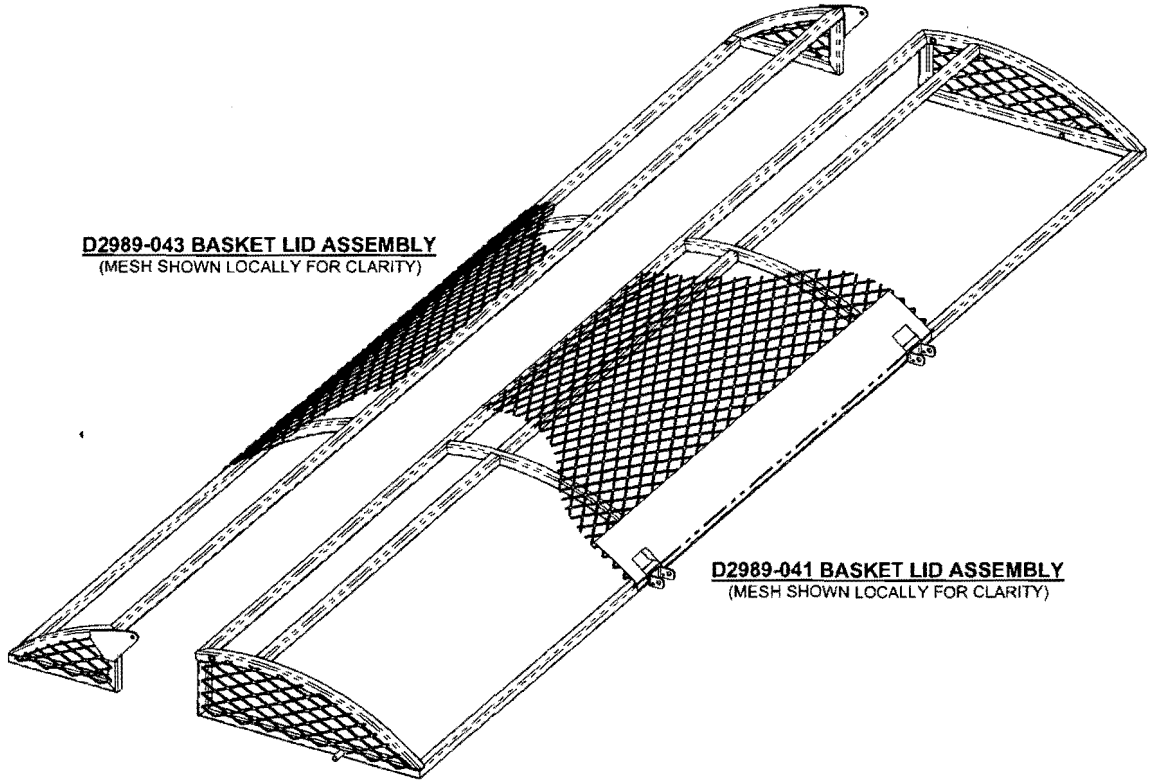

ITEM	QTY -041	QTY -043	P/N	DESCRIPTION
1	X		**D2989-041**	**BASKET LID ASSEMBLY**
2		X	**D2989-043**	**BASKET LID ASSEMBLY**
3	1		D2506	LABEL PLATE
4	1		D2512-7	RIB
5	2		D2581	MOUNTING BRACKET
6		1	D2989-3	RIB
7		1	D2989-4	RIB
8		2	D2989-5	RIB
9	2		D2989-13	RIB
10	2	1	D2989-17	RIB
11	2		D2989-19	RIB
12		2	D3182-1	HINGE
13		2	D3442-3	SHIM
14		1	D3827-041	RIB ASSY (INBOARD)
15	1		D3832-3	MESH, BASKET LID
16		1	D3832-5	MESH, BASKET LID
17	2		D3833-3	MESH, LID END
18		2	D3833-5	MESH, LID END
19	1		D3836-041	RIB ASSY (BASKET LID, LH)
20	1		D3836-042	RIB ASSY (BASKET LID, RH)
21		1	D3838-041	RIB ASSY (BASKET LID, LH)
22		1	D3838-042	RIB ASSY (BASKET LID, RH)
23	1		D3852-041	RIB ASSEMBLY
24	1		D3852-042	RIB ASSEMBLY

#6969

RELEASED 08/11/18 MD

NOTES:
1) MATERIAL: N/A
2) FINISH: POWDER COAT WHITE (4.3.5.2) PER DART QSI 005 4.3
BLACK ANTI-SKID PAINT AS INDICATED PER DART QSI 005 4.4
SPRAY PAINT INSIDE SURFACE BLACK PRIOR TO APPLYING ANTI-SKID
3) TOLERANCES: PER DART QSI 018 UNLESS OTHERWISE NOTED
4) UNITS: INCHES UNLESS OTHERWISE NOTED
5) BREAK SHARP EDGES: 0.005 TO 0.010 MAX
6) IDENTIFICATION: N/A
7) WEIGHT: D2989-041 = 26.50 lbs; D2989-043 = 15.50 lbs
8) WELD PER DART QSI 004

REV.	DESCRIPTION	BY	DATE
D	REVISED -041/-043 PARTS LISTS AND ADDED "ITEM" COLUMN TO PARTS LIST (ZN D3-1); D3836-041 REPLACES D2989-9/-15; D3836-042 REPLACES D2989-10/-15; D3838-041 REPLACES D2989-1/-7; D3838-042 REPLACES D2989-2/-7; D3852-041 REPLACES D2989-11; D3852-042 REPLACES D2989-2; REMOVED D2327-3 (NOW INSTALLED ON D3836 DWG), D2989-9/-10 (NOW ON D3836 DWG), D2989-1/-2/-7/-15 (NOW ON D3838 DWG) AND D2989-11/-12 (NOW ON D3852 DWG). REASON: TO SATISFY "LEAN MANUFACTURING" PROGRAM	MB	08.09.24
C	FRAME MATERIAL WAS 0.060 WALL; MESH MATERIAL UPDATED; DRAWING TRANSFERED TO "B" FORMAT AND CURRENT DRAFTING STANDARD	AJS	08.06.20
B	ADD SHIM UNDER HINGES, UPDATE LID DIMENSIONS	PH	05.06.07
A	NEW ISSUE	DS	00.10.27

DESIGN	DS	**DART AEROSPACE LTD** HAWKESBURY, ONTARIO, CANADA
DRAWN		
CHECKED	AJS	DRAWING NO. D2989 — REV. D — SHEET 1 OF 5
MFG. APPR.		
APPROVED		TITLE: BASKET LID ASSEMBLY — SCALE: NTS
DE APPR.		
DATE	08.09.24	

COPYRIGHT © 2000 BY DART AEROSPACE LTD
THIS DOCUMENT IS PRIVATE AND CONFIDENTIAL AND IS SUPPLIED ON THE EXPRESS CONDITION THAT IT IS NOT TO BE USED FOR ANY PURPOSE OR COPIED OR COMMUNICATED TO ANY OTHER PERSON WITHOUT WRITTEN PERMISSION FROM DART AEROSPACE LTD.

Dart Aerospace Ltd

W/O:		WORK ORDER CHANGES					
DATE	STEP	PROCEDURE CHANGE	By	Date	Qty	Approval Chief Eng / Prod Mgr	Approval QC Inspector

Part No: _____ **PAR #:** _____ **Fault Category:** _____ **NCR:** Yes No **DQA:** _____ **Date:** _____

Resolution: _____ **Disposition:** _____ **QA: N/C Closed:** _____ **Date:** _____

NCR:		WORK ORDER NON-CONFORMANCE (NCR)						
DATE	STEP	Description of NC Section A	Corrective Action Section B			Verification Section C	Approval Chief Eng	Approval QC Inspector
			Initial Chief Eng	Action Description Chief Eng	Sign & Date			

NOTE: Date & initial all entries

H:\fFORMS\Quality Assurance\approved QA\NCRWO RevE

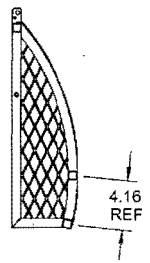

SECTION B-B D7-2

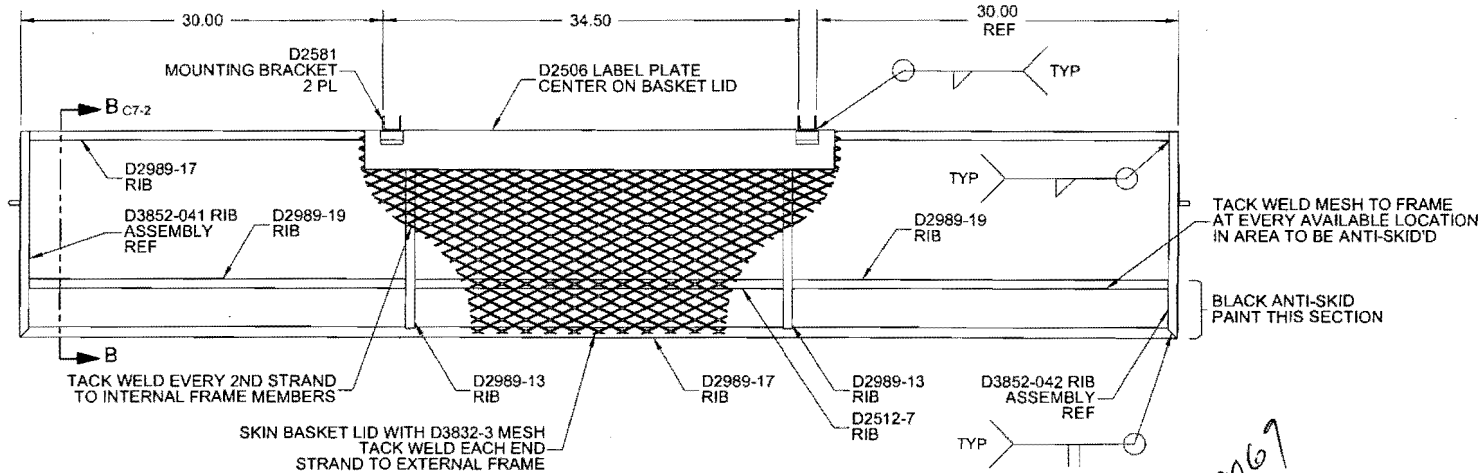

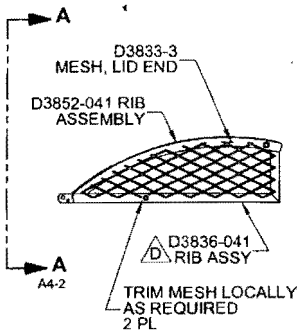

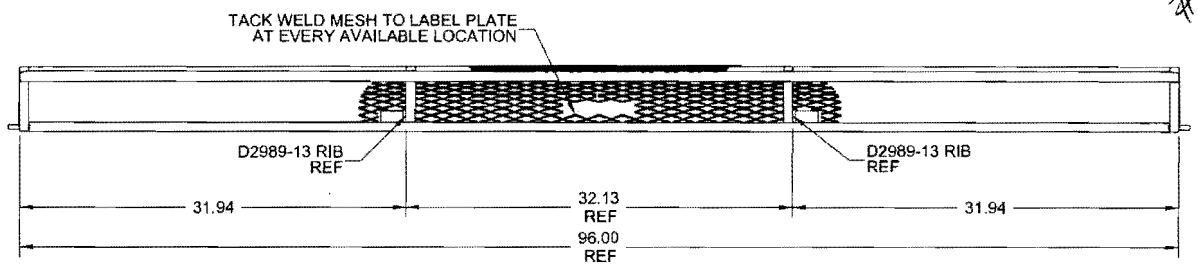

D2989-041 BASKET LID ASSEMBLY
(MESH SHOWN LOCALLY FOR CLARITY)

#69067

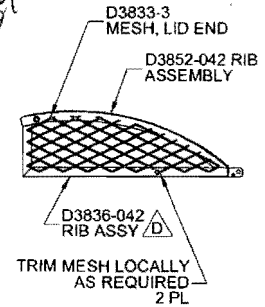

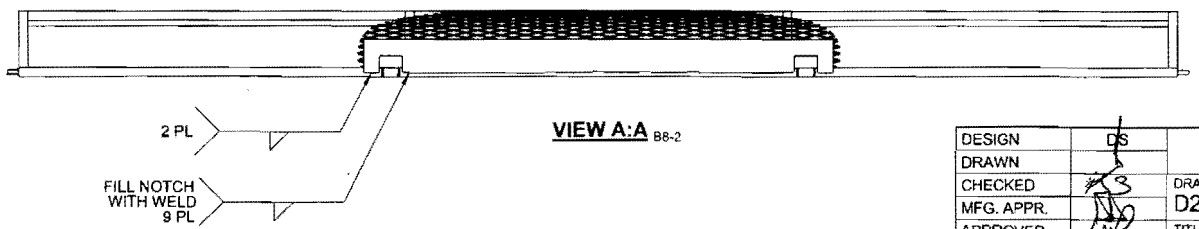

VIEW A:A B8-2

RELEASED 08/11/18

DESIGN	DS	**DART AEROSPACE LTD** HAWKESBURY, ONTARIO, CANADA
DRAWN		
CHECKED		DRAWING NO. D2989 — REV. D — SHEET 2 OF 5
MFG. APPR.		
APPROVED		TITLE: BASKET LID ASSEMBLY — SCALE: NTS
DE APPR.		
DATE	08.09.24	

COPYRIGHT © 2000 BY DART AEROSPACE LTD
THIS DOCUMENT IS PRIVATE AND CONFIDENTIAL AND IS SUPPLIED ON THE EXPRESS CONDITION THAT IT IS NOT TO BE USED FOR ANY PURPOSE OR COPIED OR COMMUNICATED TO ANY OTHER PERSON WITHOUT WRITTEN PERMISSION FROM DART AEROSPACE LTD

Dart Aerospace Ltd

W/O:		WORK ORDER CHANGES					
DATE	STEP	PROCEDURE CHANGE	By	Date	Qty	Approval Chief Eng / Prod Mgr	Approval QC Inspector

Part No: _____ **PAR #:** _____ **Fault Category:** _____ **NCR:** Yes No **DQA:** _____ **Date:** _____

Resolution: _____ **Disposition:** _____ **QA: N/C Closed:** _____ **Date:** _____

NCR:		WORK ORDER NON-CONFORMANCE (NCR)						
DATE	STEP	Description of NC Section A	Corrective Action Section B			Verification Section C	Approval Chief Eng	Approval QC Inspector
			Initial Chief Eng	Action Description Chief Eng	Sign & Date			

NOTE: Date & initial all entries

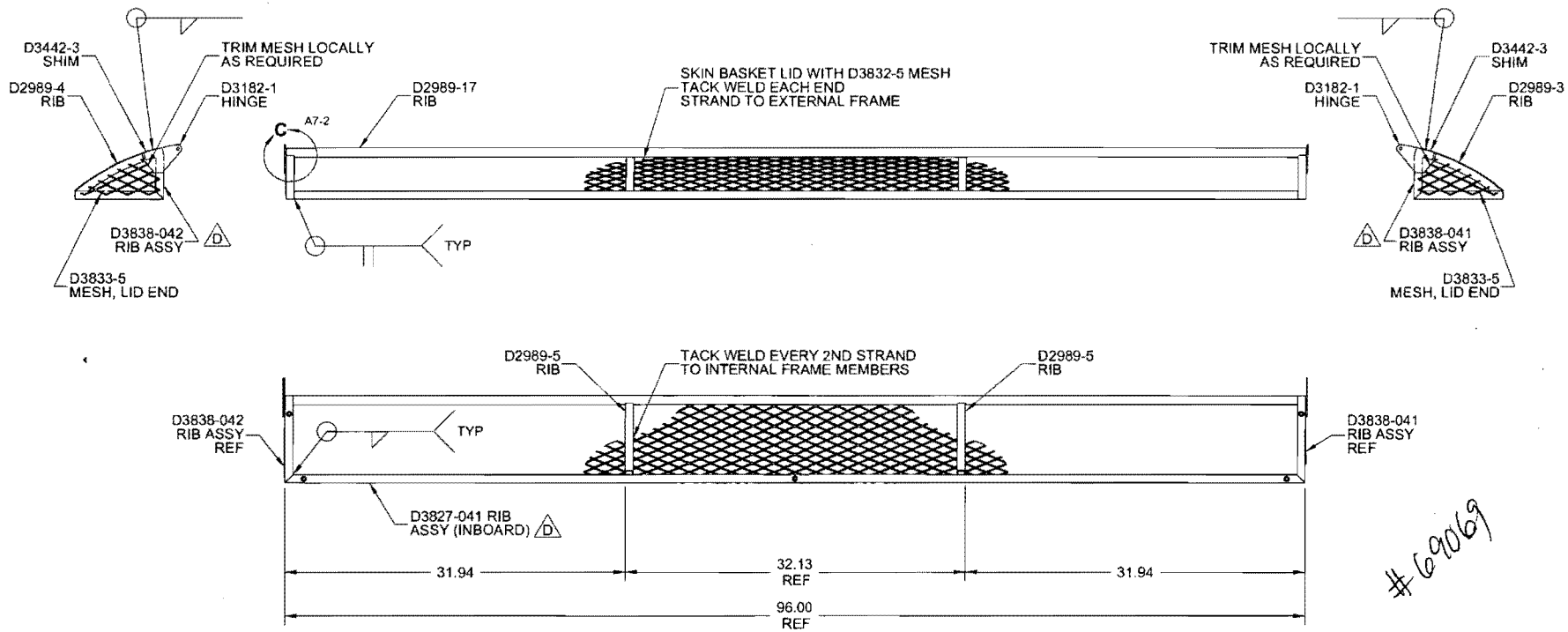

D2989-043 BASKET LID ASSEMBLY
(MESH SHOWN LOCALLY FOR CLARITY)

#69069

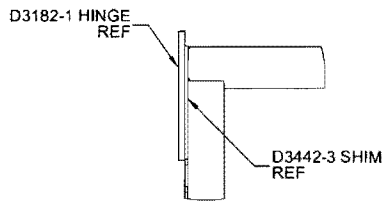

DETAIL C D7-2
TYP, SCALE 4X

RELEASED 08/11/18

DESIGN	DS	**DART AEROSPACE LTD** HAWKESBURY, ONTARIO, CANADA
DRAWN		
CHECKED		DRAWING NO. D2989 — REV. D — SHEET 3 OF 5
MFG. APPR.		
APPROVED		TITLE BASKET LID ASSEMBLY — SCALE NTS
DE APPR.		
DATE	08.09.24	

COPYRIGHT © 2000 BY DART AEROSPACE LTD
THIS DOCUMENT IS PRIVATE AND CONFIDENTIAL AND IS SUPPLIED ON THE EXPRESS CONDITION THAT IT IS NOT TO BE USED FOR ANY PURPOSE OR COPIED OR COMMUNICATED TO ANY OTHER PERSON WITHOUT WRITTEN PERMISSION FROM DART AEROSPACE LTD

Dart Aerospace Ltd

W/O:		WORK ORDER CHANGES					
DATE	STEP	PROCEDURE CHANGE	By	Date	Qty	Approval Chief Eng / Prod Mgr	Approval QC Inspector

Part No: _____ **PAR #:** _____ **Fault Category:** _____ **NCR:** Yes No **DQA:** _____ **Date:** _____

Resolution: _____ **Disposition:** _____ **QA: N/C Closed:** _____ **Date:** _____

NCR:		WORK ORDER NON-CONFORMANCE (NCR)						
DATE	STEP	Description of NC Section A	Corrective Action Section B			Verification Section C	Approval Chief Eng	Approval QC Inspector
			Initial Chief Eng	Action Description Chief Eng	Sign & Date			

NOTE: Date & initial all entries

H:\FORMS\Quality Assurance\approved QA\NCRWO RevE

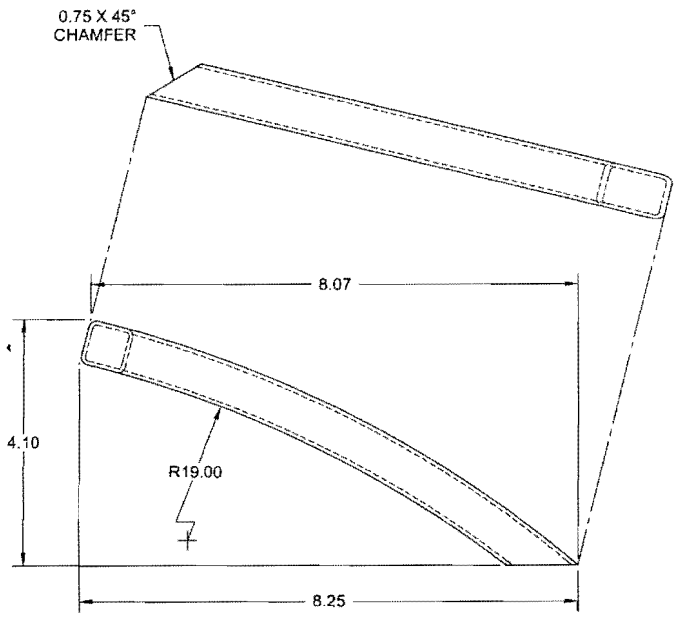

D2989-3 RIB

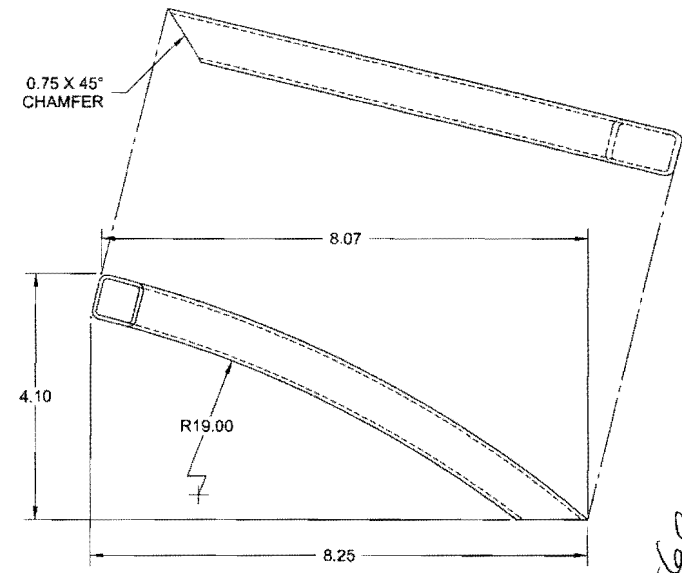

D2989-4 RIB

#-69069

RELEASED 08/11/18

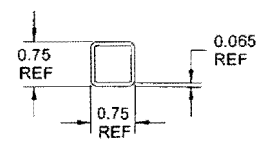

TYPICAL SECTION VIEW

NOTES:
1) MATERIAL: D3166-3 BASKET HOOP
2) FINISH: NONE
3) TOLERANCES: PER DART QSI 018 UNLESS OTHERWISE NOTED
4) UNITS: INCHES UNLESS OTHERWISE NOTED
5) BREAK SHARP EDGES: 0.005 TO 0.010 MAX
6) IDENTIFICATION: N/A
8) WEIGHT: D2989-3/-4 = 0.39 lbs;

DESIGN	DS	**DART AEROSPACE LTD** HAWKESBURY, ONTARIO, CANADA
DRAWN		
CHECKED		DRAWING NO. D2989 — REV. D — SHEET 4 OF 5
MFG. APPR.		
APPROVED		TITLE: BASKET LID ASSEMBLY — SCALE: NTS
DE APPR.		
DATE	08.09.24	

COPYRIGHT © 2000 BY DART AEROSPACE LTD
THIS DOCUMENT IS PRIVATE AND CONFIDENTIAL AND IS SUPPLIED ON THE EXPRESS CONDITION THAT IT IS NOT TO BE USED FOR ANY PURPOSE OR COPIED OR COMMUNICATED TO ANY OTHER PERSON WITHOUT WRITTEN PERMISSION FROM DART AEROSPACE LTD

Dart Aerospace Ltd

W/O:		WORK ORDER CHANGES					
DATE	**STEP**	**PROCEDURE CHANGE**	**By**	**Date**	**Qty**	**Approval** Chief Eng / Prod Mgr	**Approval** QC Inspector

Part No: _____ **PAR #:** _____ **Fault Category:** _____ **NCR:** Yes No **DQA:** _____ **Date:** _____

Resolution: _____ **Disposition:** _____ **QA: N/C Closed:** _____ **Date:** _____

NCR:		WORK ORDER NON-CONFORMANCE (NCR)						
DATE	**STEP**	**Description of NC** Section A	**Corrective Action** Section B			**Verification** Section C	**Approval** Chief Eng	**Approval** QC Inspector
			Initial Chief Eng	**Action Description** Chief Eng	**Sign & Date**			

NOTE: Date & initial all entries

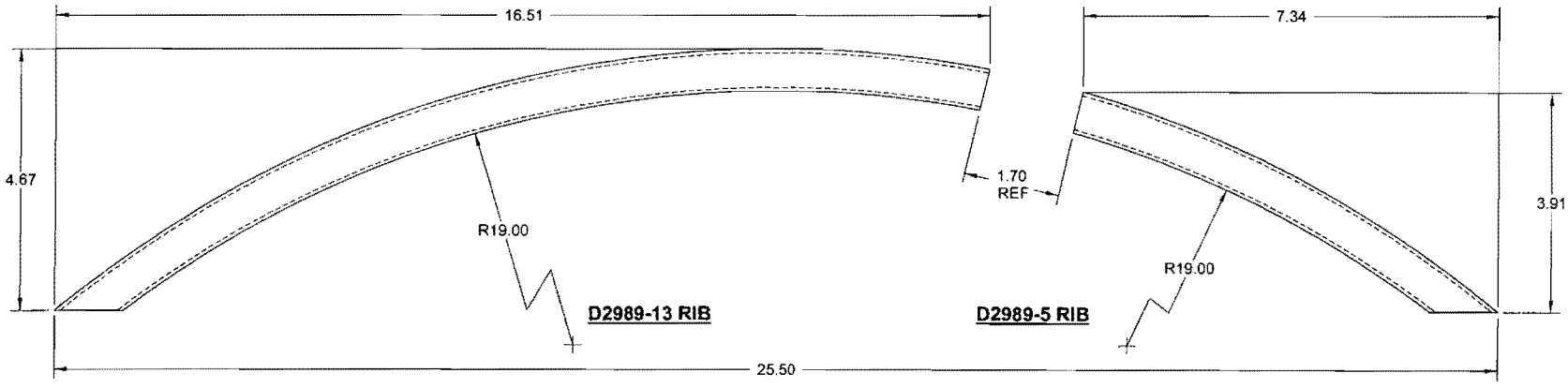

D2989-13 RIB

D2989-5 RIB

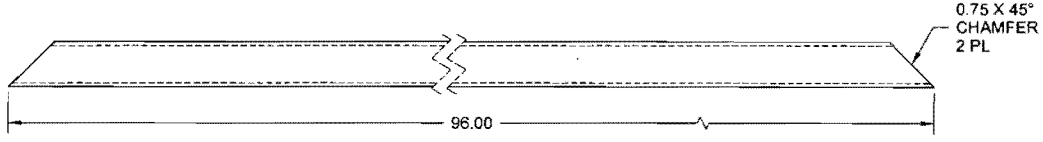

D2989-17 RIB

#69069

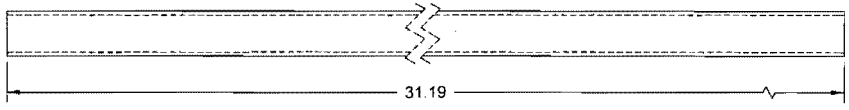

D2989-19 RIB

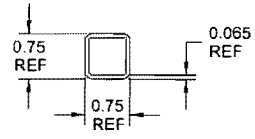

TYPICAL SECTION VIEW

RELEASED 08/11/18

NOTES:
1) MATERIAL: AISI 304/316 STAINLESS STEEL SQUARE TUBE, 0.75 X 0.75 X 0.065 WALL
REF. DART SPEC. M304TS0.750W0.065
2) FINISH: NONE
3) TOLERANCES: PER DART QSI 018 UNLESS OTHERWISE NOTED
4) UNITS: INCHES UNLESS OTHERWISE NOTED
5) BREAK SHARP EDGES: 0.005 TO 0.010 MAX
6) IDENTIFICATION: N/A
8) WEIGHT: D2989-5 = 0.37 lbs; D2989-13 = 0.81 lbs; D2989-17 = 4.57 lbs; D2989-19 = 1.50 lbs

DESIGN	DS	**DART AEROSPACE LTD** HAWKESBURY, ONTARIO, CANADA
DRAWN		
CHECKED		DRAWING NO. D2989 — REV. D — SHEET 5 OF 5
MFG. APPR.		
APPROVED		TITLE: BASKET LID ASSEMBLY — SCALE: NTS
DE APPR.		
DATE	08.09.24	

COPYRIGHT © 2000 BY DART AEROSPACE LTD
THIS DOCUMENT IS PRIVATE AND CONFIDENTIAL AND IS SUPPLIED ON THE EXPRESS CONDITION THAT IT IS NOT TO BE USED FOR ANY PURPOSE OR COPIED OR COMMUNICATED TO ANY OTHER PERSON WITHOUT WRITTEN PERMISSION FROM DART AEROSPACE LTD.

Dart Aerospace Ltd

W/O:		WORK ORDER CHANGES					
DATE	STEP	PROCEDURE CHANGE	By	Date	Qty	Approval Chief Eng / Prod Mgr	Approval QC Inspector

Part No: _____ **PAR #:** _____ **Fault Category:** _____ **NCR:** Yes No **DQA:** _____ **Date:** _____

Resolution: _____ **Disposition:** _____ **QA: N/C Closed:** _____ **Date:** _____

NCR:		WORK ORDER NON-CONFORMANCE (NCR)						
DATE	STEP	Description of NC Section A	Corrective Action Section B			Verification Section C	Approval Chief Eng	Approval QC Inspector
			Initial Chief Eng	Action Description Chief Eng	Sign & Date			

NOTE: Date & initial all entries

H:\FORMS\Quality Assurance\approved QA\NCRWO RevE